Indonesian Journal of Islamic Economics Research

Availabe at https://ejournal.uinsalatiga.ac.id/index.php/ijier

The importance of Islamic business ethics in increasing consumer loyalty to cooking oil product

Bun Norikun[1]*

[1]*Management Study Program, Faculty of Economi and Business, University Muria Kudus, Indonesia*

ARTICLE INFO

Keywords:
Islamic business ethics, consumer behavior, customer satisfaction, consumer loyalty

ABSTRACT

This research is motivated by a series of alleged fraud cases related to subsidized cooking oil, including reduced packaging volumes, sales above the highest retail price, and alleged corruption at Minyakita. These cases will impact consumer trust in cooking oil brands and, consequently, consumer loyalty. This study was conducted to determine how the dimensions of Islamic business ethics, consumer behavior, and customer satisfaction influence consumer loyalty to Minyakita brand cooking oil products. The sampling technique used purposive sampling with 112 respondents. The analysis used was Structural Equation Modeling (SEM). The conclusion of this study is that Islamic business ethics has a significant effect on consumer behavior, Islamic business ethics does not have a significant effect on consumer loyalty, Islamic business ethics has a significant effect on customer satisfaction, consumer behavior has a significant effect on customer satisfaction, consumer behavior does not have a significant effect on consumer loyalty, customer satisfaction has a significant effect on consumer loyalty. The mediating variables, namely consumer behavior and customer satisfaction, have a very strong influence on the contribution between Islamic business ethics and consumer loyalty.

How to cite:

Norikun, B. (2025). The importance of islamic business ethics in increasing consumer loyalty to cooking oil product. *Indonesian Journal of Islamic Economics Research*, 7(2). https://doi.org/10.18326/ijier.v7i2.5506

[1]* Corresponding Author. *bun.norikun@umk.ac.id*

1. Introduciton

The cooking oil industry has become the most important sector in the national economy and also has a big role in the global market. The growth of the cooking oil industry is increasingly rapid, resulting in an increase in domestic consumption, especially in the food industry of 8.9 million tons (49 percent), the biodiesel industry of 7.3 million tons (40 percent) and the oleochemical industry of 2.1 million tons (11 percent) (Sipayung, 2025). This shows that the use of palm oil in the country is dominated by food products. This growth is partly driven by increasing consumer awareness of the importance of using safe, quality products that are in accordance with their religious values. In this case, cooking oil with appropriate quality and volume has become the main choice for the community.

Business actors have established standards in accordance with SOP or company policies regarding the quality and volume of sales to consumers, which are inseparable from the ethics they practice. Honesty and good sales transactions with consumers are among the ethics recommended by religion. This is the foundation for building trust with consumers for business profits (Mampa et al., 2022). Business ethics have an important role in a company, namely building a strong business and having high competitiveness, an unethical business can damage the business itself. Business in Islamic teachings is highly recommended by the Prophet Muhammad SAW, as a role model for Muslims, he himself was a trader who was famous for implementing Islamic business in the form of the values of Shiddiq, Amanah, Tabligh, and Fatonah. Honesty in business is crucial for all of us because of the ethics exemplified by the Prophet Muhammad (peace be upon him), the prohibition on cheating on weights, excessive profit-taking, and usury, all of which are regulated in the holy book, the Quran

Referring to a series of alleged fraud related to subsidized cooking oil and several cases that emerged including reduced packaging sizes, sales above the highest retail price, and alleged embezzlement, this reflects business ethics that are not in accordance with religious norms and existing regulations in business. Rizky (2025) in its article in the Minyakkita disunat case stated that the Minister of Trade (Mendag) Budi Santoso revealed the fact that in his inspection he found cooking oil packaged not according to the label and not from the Domestic Obligation (DMO) quota, business manufacturers packaged with a smaller volume than the supposed size, found 800ml bottle packaging that was planned to be used for Minyakita production with a label written as 1000ml (1 liter), and after being measured it was proven to be only 800.2ml.

Figure 1. Facts & Complete Explanation from the Minister of Trade Regarding the Minyakita Circumcision Case

Source: CNBC Indonesia Article (2025)

Referring to the case above, it is a major factor in influencing public trust in the government subsidy program, because inconsistencies in this program can damage public trust and behavior in purchasing subsidized cooking oil. Consumer behavior is the behavior that consumers pay attention to in searching for, purchasing, using, evaluating products and services that they expect and satisfy their needs (Norikun, 2025). Kotler & Keller (2009) consumer behavior is how an individual, group and organization select, buys and uses goods, services, ideas or experiences to satisfy their needs and desires. Consumer behavior is influenced by several cultural, social, personal, and psychological factors. And with the increasing number of producers offering the same product, consumers have many choices and are becoming smarter. With this, consumer bargaining power is increasing. Consumer rights are also beginning to be considered, especially aspects of safety in the use of products or services, business ethics, and awareness and love for the environment (Tjiptono, 2014).

Based on a pre-survey related to the minyakita case, ES consumers stated that feelings of disappointment were increasing, levels of trust were lost, and consumer purchasing power was decreasing. RT as a customer for MSME businesses stated that product quality was very important, one of which was oil quality (with the discrepancy in oil content and reduced dosage), this affected the results of the finished products of MSMEs that were run and stated that the level of trust was decreasing and even to the point of stopping purchasing decisions or leaving the use of minyakita (decreasing loyalty). Customer loyalty is very important for the Company, because it can increase revenue, reduce marketing costs, and provide a competitive advantage. Loyal customers tend to make repeat purchases, recommend them to others, and provide valuable feedback.

Based on the description above, the purpose of this study is to determine how the dimensions of business ethics in Islam, consumer behavior, and customer satisfaction influence consumer loyalty to cooking oil products brand Minyakita, as well as provide an overview of the impact of the importance of ethics in running a business. The results of this study are expected to be useful for those interested or related to business, namely as input for strategies to increase consumer loyalty by always upholding business ethics and customer satisfaction.

2. Literature Review

Islamic Business Ethics

Business ethics studies the right and wrong actions of individuals. Business ethics are the rules that define what a business can and cannot do, and these rules can be derived from written or unwritten rules. Ethical behavior in business is crucial for companies, defined as the actions of individuals or groups that comply with all rules or consciously strive to act in accordance with individual morality in various matters (Soepartono & Arafah, 2024) Business ethics in Islam is a process and effort to know what is right or wrong, and then of course do big things regarding products, Company services with interested parties with Company demands (Sasnita et al., 2019). Islamic business ethics must be based on basic principles based on the Qur'an and Hadith, so that it can be measured by the intention of Ikhlas hoping for the pleasure of Allah SWT, professional, honest and trustworthy, prioritizing ethics as a Muslim, not violating sharia principles, ukhuwah Islamiyah (a form of Islamic brotherhood).

Islamic business ethics is an understanding of what is right and wrong for various business activities, based on the Qur'an and the Sunnah of the Prophet Muhammad. In the business world, Islamic business ethics begins by providing an overview of the basic principles of Islamic business ethics (Khoiriyah & Amin, 2024). States that these principles focus not only on economic aspects but also on ethics, morals, and social responsibility (Annisa et al., 2024).

1. Taqwa (awareness of Allah): requires entrepreneurs to always remember Allah in every business action which includes honesty and integrity in all transactions.
2. Amanah (trust): a core value that emphasizes the importance of trust in business relationships, including maintaining the trust given by others.
3. Justice: Requires entrepreneurs to treat people fairly and non-discriminatory, including paying wages and avoiding deception in transactions.
4. Sincerity: Doing everything with sincere intentions. Encourages entrepreneurs to conduct business with good and sincere intentions to gain Allah's blessings.
5. Shura (consultation): Emphasizes the importance of consultation or communication in decision-making.
6. Social justice: The concept of fair and equal treatment for all people in society and organizations, regardless of race, gender, social status, or other factors.
7. Sharia compliance: The principle that requires business operations to implement and comply with Islamic Sharia law, including the prohibition of riba (interest).
8. Transparency: Transparency in financial and operational reporting is crucial to building trust among stakeholders and ensuring that all business practices are conducted properly and ethically.

State that ethics is a crucial aspect of personal and business practice if properly implemented and understood (Mampa et al., 2022). Business ethics were actually taught by the Prophet Muhammad SAW when trading, the Prophet's character was good trading with the characteristics of Shidiq, Amanah, Fathanah, Tabligh and Istiqomah. The Prophet's character, characterized by his integrity, honesty, trustworthiness, faithfulness, and commitment to God's work, reflect the importance of Islamic business ethics in influencing consumer purchasing behavior. Khoiriyah & Amin, (2024) in their research at the Bak Vika Pangkalan Restaurant found that ethics significantly influence consumers in managing fast food and the impact of the food being considered haram. In their research stated that Islamic business ethics also influence customer loyalty for electronic devices at the WTC Banyuwangi (Syafa'at & Afif, 2021). In her research related to the influence of customer perceptions of Islamic business ethics on customer satisfaction with e-commerce, found that Islamic business ethics plays a significant role in influencing e-commerce customer satisfaction (Denni et al., 2022; Sholihah, 2019).

H_1: Islamic business ethics influence consumer purchasing behavior in Minyakita.

H_2: Islamic business ethics influence consumer loyalty in Minyakita.

H_3: Islamic business ethics influence consumer satisfaction in Minyakita.

Consumer Behavior

How a person, both individually and in groups, considers, chooses, buys, utilizes, and evaluates a product in order to meet their needs. Sumarwan (2017), consumer behavior is all

activities, actions, and psychological processes that drive these actions before purchasing, when purchasing, using, consuming products and services, and evaluating. (Swastha & Handoko, 2016) consumer behavior is the activities of individuals who are directly involved in obtaining and using goods and services, including the decision-making process in the preparation and determination of these activities.

Kotler & Keller (2009), argue that consumer behavior is the study of how individuals, groups and organizations choose, buy, use, and how goods, services, ideas or experiences to satisfy their needs and desires. (Hasibuan et al., 2023) states that consumer behavior is all activities, actions, and psychological processes that drive actions before buying, when buying, using, spending products and services after doing the above or evaluating activities. The individual factors that influence consumer behavior according to (Kotler & Keller, 2009; Sutejo, 2009):

1. Cultural factors: the communities with the greatest influence on a person's culture and behavioral development are family, organizations, religious institutions, educational institutions, ethnicity, and social class.
2. Social factors: the influence of a person's social environment (social groups, family, social roles or status) that can influence behavior, attitudes, and decisions, including purchasing decisions.
3. Personal factors: Consumer behavior in purchasing goods or services is influenced by personal factors, including age, gender, occupation and economic situation, fixed income, lifestyle, and values.
4. Psychological factors: Consumer behavior in purchasing goods or services is influenced by motivation, perception, learning, and memory, which fundamentally influence consumers.

Hasibuan et al., (2023) in their research on consumer behavior analysis towards consumer satisfaction stated that consumer behavior through the dimensions of cultural factors, social factors, and personal factors can influence consumer satisfaction of “You” cosmetics in Panai Tengah district. Meanwhile, (Tifany & Rustam, 2023) found in their research on shipping agency services of PT. Brani Lintas Samudera that consumer behavior has a positive and significant effect on consumer satisfaction. And meanwhile, research conducted by (Adriyati & Sunardi, 2023) stated that consumer behavior makes a significant contribution to consumer loyalty to Something products. Meanwhile, (Rosanto & Ratna Sari, 2022) in their research stated that in general, consumer behavior has a significant influence on increasing consumer loyalty in purchasing products during the new normal.

H_4: Consumer behavior influences consumer satisfaction with Minyakita purchases.

H_5: Consumer behavior influences consumer loyalty with Minyakita purchases.

Customer Satisfaction

(Tjiptono, 2014) basically the goal of a business is to create satisfied customers. The creation of customer satisfaction can provide several benefits, namely a harmonious relationship between the company and its customers, providing a good basis for repeat purchases and creating customer loyalty, and forming a profitable recommendation for the company. (Kotler & Keller, 2009) consumer satisfaction is a person's feeling of pleasure or disappointment that arises from comparing the perceived performance of a product (or result) to their expectations. (Kotler &

Armstrong, 2008; Tifany & Rustam, 2023) To achieve and maintain customer satisfaction, the requirements are:

1. Quality: A product or service meets customer expectations based on the level of quality they require by delivering what is promised. This refers to criteria such as fitness for purpose, reliability, durability, and ease of maintenance.
2. Value for money: A concept comparing costs incurred with benefits obtained.
3. Reliability: The ability of a product or service to function as intended, without failure, and for a specified period.
4. Responsiveness: The ability to respond to a stimulus or request quickly and effectively, such as attentiveness, speed, and flexibility.
5. Safety: Customers will be satisfied if the products they use are guaranteed to be safe and will not harm them.

Albar & Permatasari, (2024) found in their research that consumer satisfaction has a positive and significant influence on customer loyalty when shopping through e-commerce in Lampung. (Trishananto, 2021) also stated that consumer satisfaction has a significant influence on loyalty when purchasing Muslim fashion products through the Shopee marketplace.

H_6: Consumer satisfaction influences consumer loyalty in purchasing Minyakita.

H_7: Islamic business ethics influence consumer satisfaction through consumer behavior in purchasing Minyakita.

Consumer Loyalty

(Tjiptono, 2014) stated that customer loyalty is a customer's commitment to a brand, based on a very positive attitude and reflected in consistent repeat purchases. (Alim et al., 2025) in their research stated that customer loyalty is defined as a customer's commitment to continue purchasing products or services from a particular company, despite the existence of alternatives in the market. This is if a consumer makes repeat purchases, then the consumer is satisfied with the product or service used previously. (Alim et al., 2025) developed the concept of "outcome loyalty" regarding loyalty, linking loyalty to satisfaction and perceived value. According to Oliver, customers who are satisfied and perceive greater value from a product or service tend to exhibit higher levels of loyalty. This suggests that loyalty is influenced not only by the current transaction experience but also by the consumer's perception of long-term value. The indicators that measure consumer loyalty are:

1. Repurchase rate, which refers to consumers' desire to revisit and repurchase a product in the future.
2. Unaffected by other brands, which refers to consumers' trust in the brand and their loyalty to it.
3. Consumer preference for a brand, which refers to their liking for a brand they have purchased from their last few purchases.
4. Consumers recommend a brand to others, which refers to their recommendation or recommendation of a brand they have previously purchased.
5. Willingness to pay more, which refers to consumers' willingness to pay more for a product they have previously liked or are interested in because they have experienced its benefits.

Syafa'at & Afif (2021), in their research on the influence of Islamic business ethics on consumer loyalty through consumer satisfaction, found that consumer satisfaction plays a strong mediating role in the influence of Islamic business ethics on loyalty. Soepartono & Arafah (2024) also stated that consumer satisfaction has a strong mediating role in the influence of business ethics on customer loyalty.

H_8: Islamic business ethics influence consumer loyalty through consumer behavior in purchasing Minyakita.

H_9: Islamic business ethics influence consumer loyalty through consumer satisfaction in purchasing Minyakita.

Conceptual Framework of Research

The conceptual framework used in this research is an in-depth study based on marketing strategy theory, specifically empirical studies on the relationship between Islamic business ethics, consumer behavior, customer satisfaction, and consumer loyalty. Essentially, a successful business is inseparable from prayer and ethics. Prayer serves as a spiritual foundation for smooth operations and blessings, while ethics are moral guidelines that shape honest, fair, and responsible behavior, which are crucial for building trust and business sustainability. Consumer trust arises from company behaviors such as product quality, customer service, and integrity, which foster positive beliefs about the brand or company. These behaviors shape consistent consumer experiences, such as keeping promises, honesty, and maintaining security, with the goal of creating consumer or customer satisfaction. Customer satisfaction is a person's feeling of pleasure or disappointment that arises after comparing the performance of a product or service to their expectations. High levels of satisfaction will make customers more likely to repurchase the same product or service in the future. This is because satisfied customers have a positive experience and a strong sense of trust in the brand. Consumer loyalty is a customer's commitment to a brand, product, or service, demonstrated through repeat purchases and positive recommendations. This is a long-term commitment that includes an emotional connection, as loyal customers tend to shop more frequently and are less likely to be influenced by competitors.

The conceptual model in the construction of the literature review in this study is followed by Figure 1 as follows:

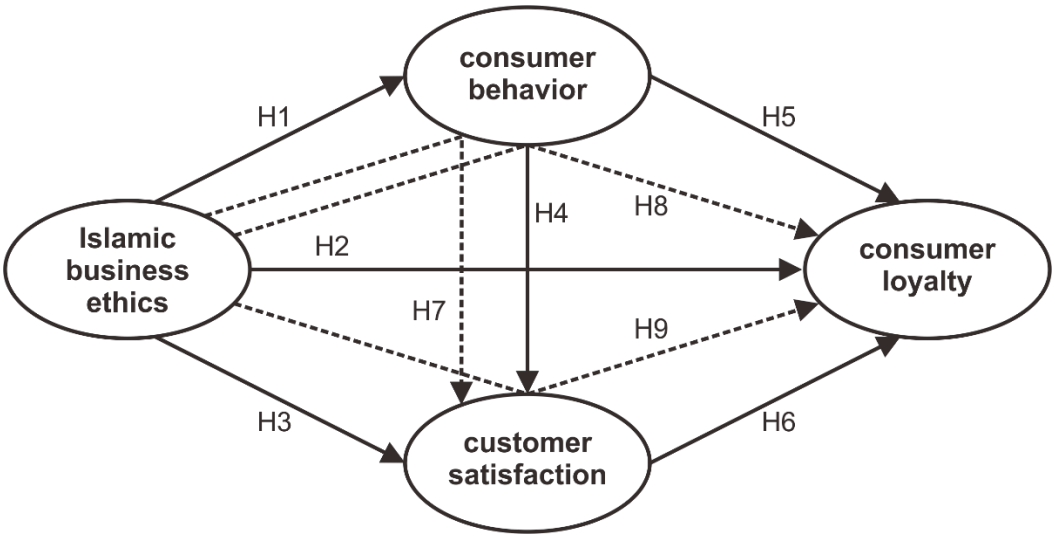

Figure 2. Conceptual Framework of the Research

3. Research Method

Research Design and Sample

This research approach uses quantitative research where this study describes the relationship between the influence of Islamic business ethics on consumer loyalty through consumer behavior and consumer satisfaction in cooking oil purchasing products. The sampling method for this study was purposive sampling, which is based on specific considerations or the selection of a group of subjects based on certain characteristics deemed relevant to the population. The respondents in this study were female and housewives, who are considered to have a significant role in household product purchasing decisions or choosing cooking oil brands.

The population size of this study is unknown, and researchers cannot accurately determine the population size. The sample size was determined using a model proposed by Hair et al., in (Ferdinad, 2013) that states that the minimum sample size that should be used is 5 to 10 times the total number of latent variable arrows in the path model or 5 to 10 times the number of indicators. Furthermore, the sample size used in Structural Equation Modeling (SEM) research is a minimum of 100 samples, the sample size for this study was 16x7 = 112 samples. Therefore, this study used a sample size of 112 respondents. (Ghozali, 2017) suggested that the sample size for the SEM method should be between 100 and 200.

Research Constructs and Measurement Items

This study has three types of variables: exogenous, endogenous, and intervening. The exogenous variable in this study is Islamic business ethics, the endogenous variable is consumer loyalty, and the intervening variables are consumer behavior and satisfaction. The definitions of the variables and their operationalization are as follows:

1. Islamic business ethics: a process and effort to know what is right or wrong, and then of course do great things regarding the Company's products and services with interested parties according to the Company's demands (Sasnita et al., 2019). This variable is measured by the

indicators of shidiq (honest), Amanah (trustworthy), fathanah (intelligent), tabligh (conveying).

2. Consumer behavior: the activities of individuals directly involved in obtaining and using goods and services, including the decision-making process in preparing and determining these activities (Swastha & Handoko, 2016).This variable is measured using indicators, namely cultural, social, personal, and psychological factors.
3. Consumer satisfaction: a person's feelings of pleasure or disappointment that arise after comparing their perception of a product's performance with their expectations. This variable is measured using indicators such as quality, value for money, reliability, and safety.
4. Consumer loyalty: a customer's commitment to a brand, based on a very positive attitude and reflected in consistent repeat purchases (Tjiptono, 2014). This variable is measured using indicators such as repeat purchase rate, not being influenced by other brands, affordable prices, and consumers recommending a brand to others.

Data Analysis

The stages in the data analysis and based on the hypothesized relationships in this study were analyzed through the Structural Equation Model (SEM) using AMOS. This analysis aims to determine the demographics of respondents, followed by descriptive analysis evaluation, validity and reliability, and evaluate the results of the hypothesis. This test was also tested using the Confirmatory Factor Analysis (CFA) model, which is the stage of measuring the dimensions that form the other variables in the research model. The Goodness of Fit criteria for this test are:

Table 1. Cut Off Confirmatory Factor Analysis (CFA)

Goodness of Fit Indices	***Cut off Value***
X^2 – Chi Square	*Expected small*
Probabilitas	≥0.05
CMIN/DF	≤ 2.0
Root Mean Square Error of Approximation (RMSEA)	≤0.08
Goodness of Index (GFI)	≥0.90
Adjusted Goodness of Index (AGFI)	≥0.90
Tucker-Lewis Index (TLI)	≥0.90
Comparative Fit Index (CFI)	≥0.90

Data Source: Ghozali (2017)

4. Result

The results of this study are presented with the results of testing respondents' answers regarding consumer loyalty in purchasing Minyakita cooking oil with a total of 112 respondents and will be presented with testing using the Structural Equation Model (SEM) analysis method.

Demograhpic of Respondents

The demographic data of respondents in this study include Gender, Age, Occupation, and level of cooking oil use. The majority of respondents' level of cooking oil use is respondents Often use cooking oil as many as 51 respondents (46%). The majority of respondents are female 82 respondents (73%), followed by the majority of respondents aged 29-34 years as many as 48

respondents (43%), and the majority of respondents who use oil have private employee jobs as many as 35 respondents (31%) and followed by housewives as many as 31 respondents (28%).

Validity and Reliability Test

Validity testing is used to determine the validity of a measuring instrument used to assess a questionnaire. The results of this research's validity analysis are as follows:

Table 2. Results of Validity Test

			Estimate
IBE1	<---	islamic_business_ethics	.856
CB1	<---	consumer_behavior	.930
IBE4	<---	islamic_business_ethics	.856
IBE3	<---	islamic_business_ethics	.839
IBE2	<---	islamic_business_ethics	.910
CB4	<---	consumer_behavior	.766
CB3	<---	consumer_behavior	.645
CB2	<---	consumer_behavior	.673
CS4	<---	customer_satisfaction	.898
CS3	<---	customer_satisfaction	.885
CS1	<---	customer_satisfaction	.911
CS2	<---	customer_satisfaction	.855
CL4	<---	consumer_loyalty	.890
CL3	<---	consumer_loyalty	.879
CL2	<---	consumer_loyalty	.882
CL1	<---	consumer_loyalty	.882

Source: Data analysis (processed) 2025

The validity test table shows that the indicators from respondents' answers to the variables of Islamic business ethics, consumer behavior, customer satisfaction, and consumer loyalty have values above the threshold of 0.5. Therefore, all construct variables in this study meet the criteria for acceptance.

Reliability testing was conducted by measuring the correlation between questionnaire responses. A variable is considered reliable if the composite reliability value is >0.60. The following are the results of the reliability test for each latent variable:

Table 3 Results of Reliability Test

Variabel	CR	Cutoff	Keterangan
Islamic Business Ethics	0,923	0,6	Reliabel
Consumer Behavior	0,844	0,6	Reliabel
Customer Satisfaction	0,937	0,6	Reliabel
Consumer Loyalty	0,926	0,6	Reliabel

Source: Data analysis (processed) 2025

Based on the reliability test in Table 2, it can be seen that for the variables of Islamic business ethics, consumer behavior, customer satisfaction, and consumer loyalty, the output of all

variables has a value above the threshold in this study of 0.6 so that all research data can be declared to meet the reliable requirements.

Confirmatory Factor Analysis (CFA)

Based on the results of the analysis above, it can be seen that the CFA construct was evaluated based on goodness of fit, which shows that the model fits the data.

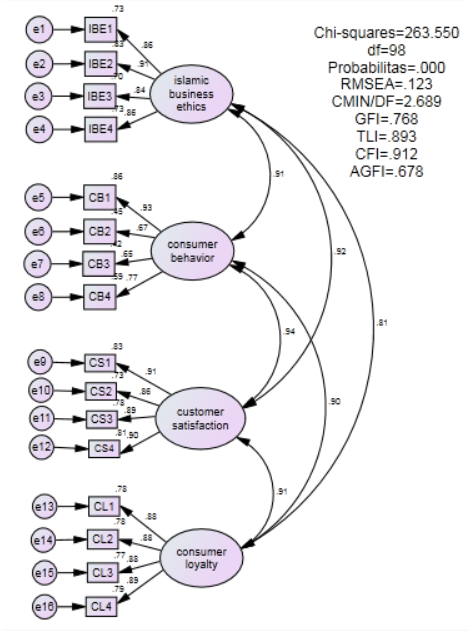

Figure 3. Confirmatory Factor Analysis Full Measurement

Table 4. Results Confirmatory Factor Analysis Full Measurement

Goodness of Fit Indices	*Cut off Value*	*Results*	*Description*
X^2 – Chi Square	*Expected small*	263.55	outer
Probabilitas	≥0.05	0.000	outer
CMIN/DF	≤ 2.0	2.689	Fit
Root Mean Square Error of Approximation (RMSEA)	≤0.08	0.123	outer
Goodness of Index (GFI)	≥0.90	0.768	outer
Adjusted Goodness of Index (AGFI)	≥0.90	0.678	outer
Tucker-Lewis Index (TLI)	≥0.90	0.893	Fit (approach)
Comparative Fit Index (CFI)	≥0.90	0.912	Fit

Source: Data analysis (processed) 2025

Based on the model evaluation presented, it can be concluded that the overall construct evaluation yielded values that were below and above the critical threshold. This indicates that the model is considered to be a good fit to the available data.

Structural Model

Structural testing of this model tests and evaluates the hypothetical relationships proposed in the research conceptual model.

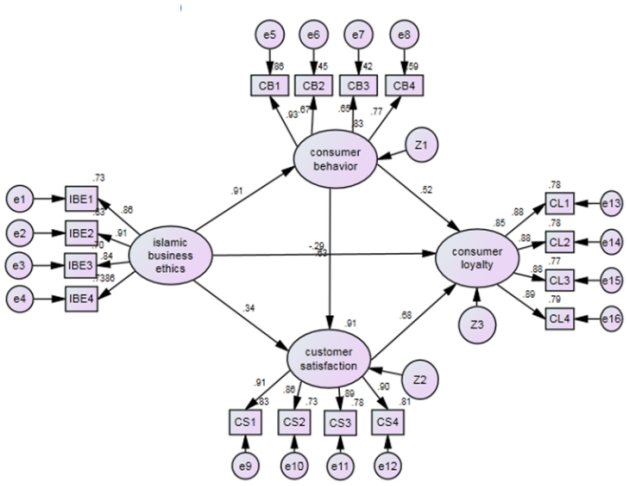

Figure 4. Structural Model

Table 5. Results of Hypothesis Test

			Estimate	S.E.	C.R.	P
consumer_behavior	<---	islamic_business_ethics	,639	,085	7,512	***
customer_satisfaction	<---	consumer_behavior	,833	,242	3,442	***
customer_satisfaction	<---	islamic_business_ethics	,320	,147	2,184	,029
consumer_loyalty	<---	islamic_business_ethics	-,328	,221	-1,483	,138
consumer_loyalty	<---	consumer_behavior	,841	,465	1,807	,071
consumer_loyalty	<---	customer_satisfaction	,830	,329	2,523	,012

Source: Data analysis (processed) 2025

Based on the results table of Structural Equation Modeling (SEM) with exogenous variable pressure on endogenous, the results of this research hypothesis can be seen that the empirical data shows the first hypothesis of the influence of Islamic business ethics on consumer behavior, namely the CR value of 7.512> 1.981 and the probability value ρ = 0.000 <0.05, meaning that Islamic business ethics have a positive and significant effect on consumer behavior. So, the higher the consumer's view that business actors have business ethics in Islam that have been taught, the higher the behavior of consumers and manufacturers in doing business. The second hypothesis of the influence of Islamic business ethics on consumer loyalty, namely the CR value of -1.483 <1.981 and the probability value ρ = 0.138> 0.05, meaning that Islamic business ethics cannot have a significant effect on consumer loyalty. So, the lower the business ethics carried out by manufacturers, the more it will affect consumer loyalty, meaning that if the company is not honest in selling products, then this value will be accepted by consumers. The third hypothesis is the influence of Islamic business ethics on customer satisfaction, namely the CR value of 2.184 > 1.981 and the probability value ρ = 0.029 < 0.05, meaning that Islamic business ethics has a positive and significant effect on customer satisfaction. So, the higher the business ethics carried out by the manufacturer, the more it will affect customer satisfaction. The fourth hypothesis is the influence of consumer behavior on customer satisfaction, namely the CR value of 3.442 > 1.981 and the probability value ρ = 0.000 < 0.05, meaning that consumer behavior has a positive and significant effect on customer satisfaction. So the higher the consumer behavior, the higher customer satisfaction. The fifth hypothesis is the influence of consumer behavior on customer

loyalty, namely the CR value of 1.807 < 1.981 and the probability value ρ = 0.071 > 0.05, meaning that consumer behavior does not have a significant effect on customer loyalty. So, the lower the consumer behavior, the more it will affect the level of customer loyalty. The sixth hypothesis is the influence of customer satisfaction on consumer loyalty, namely the CR value of 2.523 > 1.981 and the probability value ρ = 0.012 < 0.05, meaning that customer satisfaction has a positive and significant effect on customer loyalty. Therefore, the higher the customer satisfaction, the higher the consumer loyalty.

The moderation analysis in this study will show the extent of the moderating variable's contribution to the endogenous variable. Table 4 shows the direct effect, indirect effect, and total effect as follows:

Table 4 Results of Direct Effect, Indirect Effect, and Total Effect Analysis

Pengaruh Langsung	**Islamic business ethics**	**Consumer behavior**	**Customer satisfaction**	**Consumer loyalty**
Consumer behavior	.910	.000	.000	.000
Customer satisfaction	.344	.628	.000	.000
Consumer loyalty	-.289	.520	.681	.000
Pengaruh Tidak Langsung	**Islamic business ethics**	**Consumer behavior**	**Customer satisfaction**	**Consumer loyalty**
Consumer behavior	.000	.000	.000	.000
Customer satisfaction	.572	.000	.000	.000
Consumer loyalty	1.097	.428	.000	.000
Pengaruh Total (Total Effect)	**Islamic business ethics**	**Consumer behavior**	**Customer satisfaction**	**Consumer loyalty**
Consumer behavior	.910	.000	.000	.000
Customer satisfaction	.916	.628	.000	.000
Consumer loyalty	.808	.948	.681	.000

Source: Data analysis (processed) 2025

Based on the results of testing direct influence, indirect influence, and total influence, it can be seen from the table above and it can be concluded that:

1. The influence of Islamic business ethics on customer satisfaction through consumer behavior has a value of 0.916, greater than the direct influence of 0.910. This means that consumer behavior acts as an intervening or mediating influence that has optimal (very strong) strength between Islamic business ethics and customer satisfaction. This can be concluded that the seventh hypothesis: Islamic business ethics has a significant influence on customer satisfaction through consumer behavior.
2. The influence of Islamic business ethics on customer loyalty through consumer behavior has a value of 808, which is greater than the direct influence of -0.289. This means that consumer behavior acts as an intervening or mediating influence that has optimal (very strong) strength between Islamic business ethics and consumer loyalty. This can be concluded that the eighth

hypothesis: Islamic business ethics has a significant influence on consumer loyalty through consumer behavior.

3. The influence of Islamic business ethics on customer loyalty through customer satisfaction has a value of 0.808, which is greater than the direct influence of 0.344. This means that consumer satisfaction acts as an intervening or mediating influence that has optimal (very strong) strength between Islamic business ethics and consumer loyalty. This can be concluded that the ninth hypothesis: Islamic business ethics has a significant influence on consumer loyalty through customer satisfaction

The test data for this study can also be seen from the determination test (R-squared), which measures the model's ability to explain endogenous variation. The following are the results of the R-squared test:

Table 5 Results of Determination Test (R Squared)

	Estimate
consumer_behavior	.829
customer_satisfaction	.907
consumer_loyalty	.850

Source: Data analysis (processed) 2025

Based on the table above, the magnitude of Squared Multiple Correlations for Consumer behavior is 0.829, meaning that 82.9% of variations in Consumer behavior can be explained by exogenous variables of Islamic business ethics, while the remaining 17.1% is explained by other factors that are not studied or outside the model. Squared Multiple Correlations for the customer satisfaction variable is 0.907, meaning that 90.7% of variations in customer satisfaction can be explained by exogenous variables of Islamic business ethics and Consumer behavior, while the remaining 9.3% is explained by other factors that are not studied or outside the model. Squared Multiple Correlations for the consumer loyalty variable is 0.850, meaning that 85% of variations in consumer loyalty can be explained by exogenous variables of Islamic business ethics, Consumer behavior, and Customer satisfaction, while the remaining 15% is explained by other factors that are not studied or outside the model.

5. Discussion

Based on the results of the discussion and data analysis with the Structural Equation Model (SEM) in this study that the variable of Islamic business ethics in influencing consumer behavior, customer satisfaction, and consumer loyalty, it is known that the respondent's response that has a low level of agreement is shidiq (honest). This is proven that the public found dishonesty in Minyakita products, namely by reducing the volume from 1 liter packaging to <1 liter (plastic bottle packaging) or inappropriate measurements, inappropriate labels, and the price of Minyakita sold in the market exceeds the highest retail price (HET). The HET for cooking oil is set at 15,700 (Mendag, 2024), but Minyakita is actually sold at a price of Rp. 17,500 to 18,000 /liter. This should be a concern for all stakeholders, not just the public; the government must intervene to address the following issues. Companies and stakeholders must prioritize policymaking regarding product quality, including pricing and pricing, as this relates to trade ethics that will impact product sales. This is a crucial factor in consumer trust and repurchase decisions. This study also demonstrates

that Islamic business ethics have a positive and significant impact on consumer behavior. This means that the better the business ethics implemented, the higher the consumer's product selection behavior. Second, the analysis shows that Islamic business ethics do not significantly impact consumer loyalty. This means that consumers have not yet chosen the Minyakita brand in consumer loyalty decisions due to the low business ethics implemented by the business owners. Based on the lowest respondent's answer to Islamic business ethics, namely the indicator "Minyakita brand cooking oil always provides correct and accurate information to customers regarding the products offered," this proves that many people find that the information contained in the packaging, especially the bottle packaging, does not match the net weight information on the packaging and the product contents. This should be reviewed by management regarding long-term strategies to create good business ethics and customer loyalty. Third, the analysis shows that Islamic business ethics has a positive and significant influence on customer satisfaction. This means that the better the business ethics, the higher the customer satisfaction in choosing products.

Consumer behavior variables in influencing consumer satisfaction and consumer loyalty, it is known that the answers of respondents who have a low level of agreement are the influence of the social environment, namely the surrounding environment influencing in purchasing Minyakita products. This is proven by the low social factors in the community environment towards Minyakita brand cooking oil products in recommending to friends, relatives, or neighbors. Because respondents have fears if they recommend, it turns out to be unsuitable and uncomfortable because respondents already know the high and low quality of Minyakita. Some people who have a higher economy, they will not choose Minyakita and already know the quality and issues that occur in the field. Therefore, consumer behavior must be maintained and this is the basis for developing marketing strategies because it is related to consumer mindsets towards usage decisions. Meanwhile, this study states that the fifth hypothesis of consumer behavior variables has a positive and significant influence on consumer satisfaction, this means that the higher the consumer behavior, the higher the consumer satisfaction. Based on the lowest respondent's answer to consumer behavior, namely "People around me influence me to purchase Minyakita products", this is proven that word of mouth (e-WoM) strategies at Minyakita are still weak due to product inconsistencies, people are still afraid to invite people to buy because the quality is less than perfect. Fifth, the analysis shows that consumer behavior variables do not have a significant influence on consumer loyalty. So the lower the consumer behavior, the more it will affect the level of customer loyalty. (Eni Purwani, 2025) stated that different measurements of Minyakita are exploited by individuals to be taken, then mixed and made into bulk. It is feared that Minyakita's processing is like recycling. This will affect the results and quality of the product received by consumers and reduce the reliability of the related product, this is evidence that consumer satisfaction is very important. Consumer satisfaction is the feeling of pleasure or disappointment of consumers after comparing product performance with their expectations. It is feared that Minyakita's processing is like recycling. When recycled, it means that Minyakita will be added with oil other than Minyakita and then reprocessed. This must be considered by companies and the government regarding consumer satisfaction, this will affect the company's health from a financial perspective. Meanwhile, the results of this study found that the hypothesis of the six consumer satisfaction variables has a positive and significant influence on consumer loyalty. This means that the higher the consumer satisfaction, the higher the customer loyalty. Based on the respondents' answers, the lowest in consumer satisfaction was "reliability of

Minyakita", this means that consumers do not agree that Minyakita can be used multiple times for frying. Based on this, it was found that the oils on the market had different colors and it was suspected that there was fraud or a mixture with other oils, so that the quality of the product would decrease.

The variable of consumer loyalty to cooking oil brand Minyakita is known that the responses of respondents who have low approval are not influenced by other brands. It is known that the answers to this are classified as low, meaning that it is known that people do not carry out as stated above, namely people choose other brands compared to Minyakita which has the same high retail price (HET) and higher quality. Consumer loyalty strategy is very important and fundamental because the performance of a marketing is measured by how many consumers are loyal to the product, so if we intend to do business, it must be based on good ethics and so that consumers make repeat purchases.

6. Conlusions

Based on the research results discussed above, this study concludes that all variables have not been able to contribute to increasing consumer loyalty in purchasing Minyakita, this is because there are still perceptions and rejections from consumers in Minyakita sales ethics. This study states that Islamic business ethics have a significant effect on consumer loyalty through consumer behavior and customer satisfaction, except for the influence of Islamic business ethics on consumer loyalty, this cannot contribute, and behavior does not affect consumer loyalty.

This research contributes to various businesses, particularly in the oil sales industry. It is hoped that these results will highlight the importance of business ethics in product sales and foster customer loyalty. Any effort a company makes to consumers, whether through products or services, will be deeply ingrained in their minds and souls.

Future research should examine other variables that further strengthen this relationship, such as user experience, social influence, word-of-mouth, and price increases. This examination, in this context, will hopefully provide further insight into the dynamics of Islamic business ethics in influencing consumer loyalty.

7. Referensi

Adriyati, H., & Sunardi. (2023). Pengaruh Perilaku Konsumen Dan Persepsi Konsumen Tentang Produk Somethinc Terhadap Loyalitas Pelanggan. *Jurnal Administrasi Publik & Bisnis*, *5*(2), 71–77. https://ejournal.stia-lk-dumai.ac.id/index.php/japabis/article/view/91

Albar, I., & Permatasari, B. (2024). Kepuasan Pelanggan dan Kepercayaan Pelanggan Terhadap Loyalitas Pelanggan Dalam Berbelanja Melalui E-Commerce Di Lampung. *Jurnal Administrasi Bisnis (JAB*, *14*(2).

Alim, T., Zufriah, D., & Fathoni, M. I. (2025). Pengaruh Kepuasan Pelanggan dan Kualitas Layanan Terhadap Loyalitas Pelanggan pada E-Commerce Shopee. In *Maret: Vol. XII* (Issue 1).

Annisa, M., Shafitri, O., Sinaga, R. N., Wirayuda, F., Ramadhi, A. W., & Siregar, P. A. (2024). Pengaruh Implementasi Etika Bisnis Syariah Terhadap Keputusan Gen Z Dalam Pembelian Produk Makanan Viral Di Sosmed. In *Jurnal Spektrum Ekonomi* (Vol. 7).

Denni, D., Robin, R., Irwadi, I., Hendy, H., & Victor, V. (2022). Pengaruh Etika Bisnis Dan Kualitas Pelayanan Terhadap Kepuasan Konsumen Pada PT Rolimex Medan. *Sebatik*, *26*(1), 231–238. https://doi.org/10.46984/sebatik.v26i1.1839

Eni Purwani. (2025, March 19). Ramai Minyakita, Seperti Apa Minyak Goreng yang Baik Itu? *Universitas Muhammadiyah Surakarta (UMS)*. https://news.ums.ac.id/id/03/2025/ramai-minyakita-seperti-apa-minyak-goreng-yang-baik-itu/

Ferdinad, A. (2013). *Metode Penelitian Manajemen* (4th ed.). Universitas Diponegoro.

Ghozali, I. (2017). *Model Persamaan Struktural Konsep dan Aplikasi dengan Program AMOS 24 Update Bayesian SEM* (7th ed.). Universitas Diponegoro.

Hasibuan, K., Pristiyono, & Simanjuntak, D. (2023). Analisis Faktor Perilaku Konsumen terhadap Kepuasan Konsumen melalui Komunikasi Pemasaran. *Remik: Riset Dan E-Jurnal Manajemen Informatika Komputer*, *7*(3). https://doi.org/10.33395/remik.v7i3.12575

Khoiriyah, U., & Amin, R. F. (2024). Perspektif Etika Bisnis Islam terhadap Perilaku Konsumen dalam Pengambilan Keputusan Pembelian Makanan Cepat Saji di Rumah Makan Bak Vika Bangkalan. *Al-Idarah: Jurnal Manajemen Dan Bisnis Islam*, *5*(2), 74–87. https://journal.ibrahimy.ac.id/index.php/idarah

Kotler, P., & Armstrong, G. (2008). *Prinsip-Prinsip Pemasaran* (12th ed., Vol. 1). Erlangga.

Kotler, P., & Keller, K. L. (2009). *Manajemen Pemasaran, Jilid 1* (1st ed.). Erlangga.

Mampa, A. A., Bukido, R., & Jamal, R. (2022). Etika Bisnis Islam Dalam Perilaku Bisnis Pedagang Muslim Makassar Kota Manado. In *Journal of Economics and Islamic Economics* (Vol. 2, Issue 2). http://ejournal.iain-manado.ac.id/index.php/maqrizi

Mendag. (2024). *Keputusan Menteri Perdagangan Republik Indonesia Nomor 1028 Tahun 2024 Tentang Penetapan Harga Eceran Tertinggi Minyak Goreng Rakyat, Pemenuhan Kebutuhan Dalam Negeri (Domestic Market Obligation), Dan Harga Penjualan Di Dalam Negeri (Domestic Price Obligation) Minyak Goreng*. https://jdih.kemendag.go.id/pdf/Regulasi/2024/KEPMENDAG%201028%20Tahun%202024%20(HET).pdf

Norikun, B. (2025). The Importance of Government Policy in Influencing the Increase in Purchasing Interest Electric Vehicles. *International Journal of Multidisciplinary Research and Growth Evaluation*, *6*(2), 395–400. https://www.allmultidisciplinaryjournal.com/uploads/archives/20250318150157_MGE-2025-2-091.1.pdf

Rizky, M. (2025, March 10). *Kasus MinyaKita "Disunat", Kemendag Sudah Temukan Pelanggarannya*. https://www.cnbcindonesia.com/news/20250310131748-4-617206/kasus-minyakita-disunat-kemendag-sudah-temukan-pelanggarannya

Rosanto, S., & Ratna Sari, N. (2022). Pengaruh Perilaku Konsumen Terhadap Loyalitas Pembelian di Masa New Normal (Studi Kasus Pada Onezo Indonesia). In *Destinesia Jurnal Hospitaliti & Pariwisata* (Vol. 3, Issue 2). http://ojs.stiami.ac.id

Sasnita, A., Siti Musyahidah, & Nursyamsu Nursyamsu. (2019). Pengaruh Etika Bisnis Islam Terhadap Keputusan Pembelian Busana Muslimah Mahasiswi Jurusan Ekonomi Syariah IAIN Palu. *Jurnal Ilmu Ekonomi Dan Bisnis Islam*, *1*(2), 70–88. https://doi.org/10.24239/jiebi.v1i2.12.70-88

Sholihah, F. A. (2019). Pengaruh Persepsi Pelanggan Terkait Etika Bisnis Islam Terhadap Kepuasan Pelanggan Pengguna Ecommerce. *Jurnal Ekonomi Islam*, *2*(3), 156–162.

Sipayung, T. (2025). Industri Sawit Indonesia : Perkembangan Mutakhir (2025). *Palm Oil Agribusiness Strategic Policy Institute.* https://palmoilina.asia/sawit-hub/perkembangan-industri-sawit-indonesia/

Soepartono, S. A. P., & Arafah, W. (2024). Pengaruh Perilaku Etis Penjual terhadap Loyalitas Pelanggan, Kepuasan, dan Kepercayaan dalam Industri Pakaian. In *AKADEMIK: Jurnal Mahasiswa Ekonomi & Bisnis* (Vol. 4, Issue 3).

Sumarwan, U. (2017). *Perilaku Konsumen Teori dan Penerapannya dalam Pemasaran* (2nd ed.). Grelia Indonesia.

Sutejo, S. (2009). *Manajemen Pemasaran* (2nd ed.). Damar Mulia Pustaka.

Swastha, B. D., & Handoko, T. , H. (2016). *Manajemen Pemasaran Analisis Perilaku Konsumen* (1st ed., Vol. 7). BPFE Yogyakarta Anggota IKAPI.

Syafa'at, A., & Afif, A. (2021). Pengaruh Pendekatan Etika Bisnis Islam Dan Garansi Terhadap Loyalitas Pelanggan Melalui Kepuasan Konsumen Handphone Di WTC Banyuwangi. *Indonesian Journal of Islamic Economics & Finance*, *4*(2), 22–25.

Tifany, & Rustam, T. A. (2023). Pengaruh Persepsi dan Perilaku Konsumen terhadap Kepuasan Pelanggan di PT. Brani Lintas Samudera. *SEIKO : Journal of Management & Business*, *6*(2), 216–230.

Tjiptono, F. (2014). *Strategi Pemasaran Edisi 3* (3rd ed.). Andi Offset.

Trishananto, Y. (2021). Pengaruh Kepuasan terhadap Loyalitas pada Pembelian Produk Fashion Muslim Melalui Marketplace Shopee The effect of satisfaction on loyalty on the purchase of muslim fashion products through the Shopee marketplace. *Journal of Applied Islamic Economics and Finance*, *1*(3), 524–537.